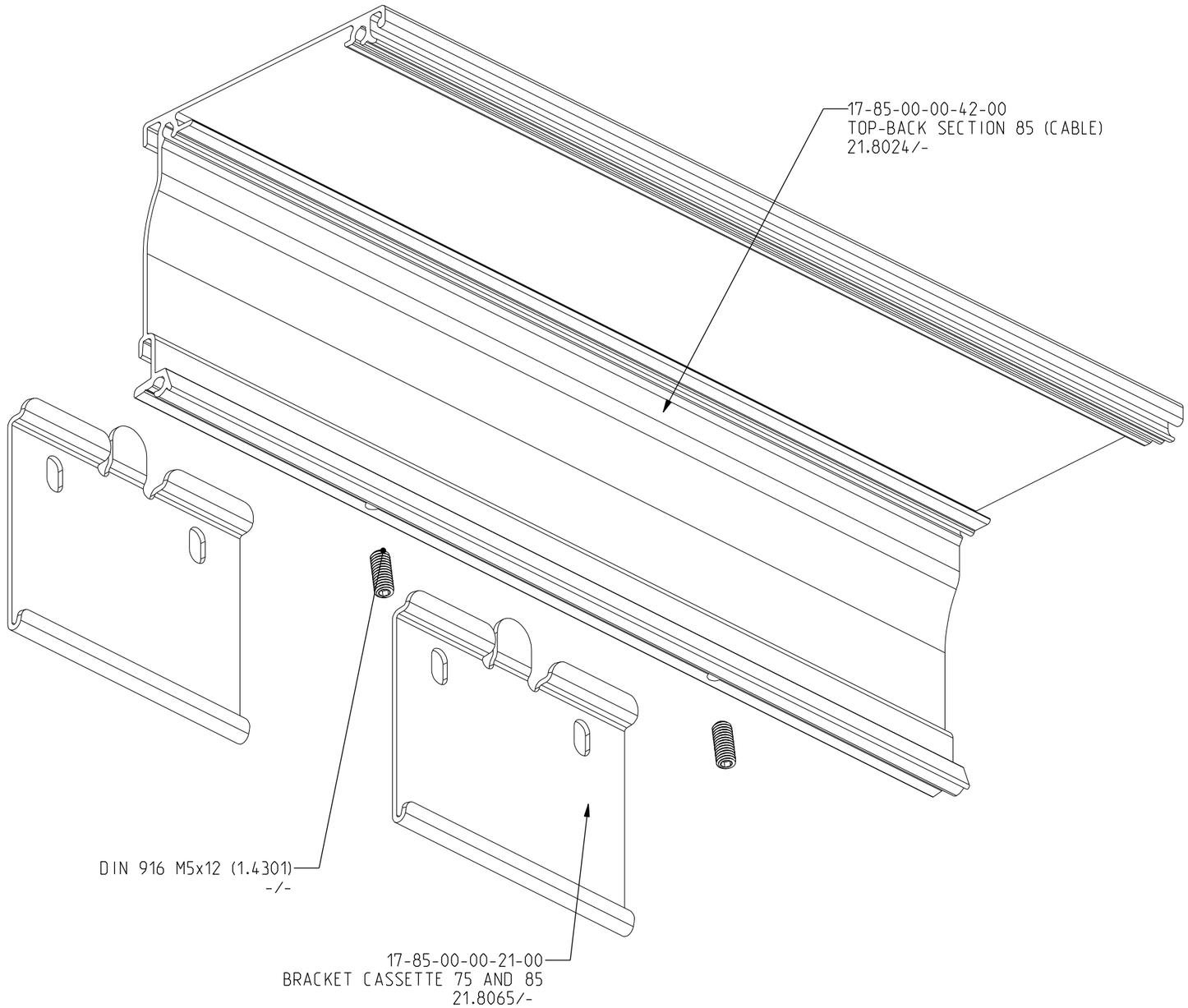

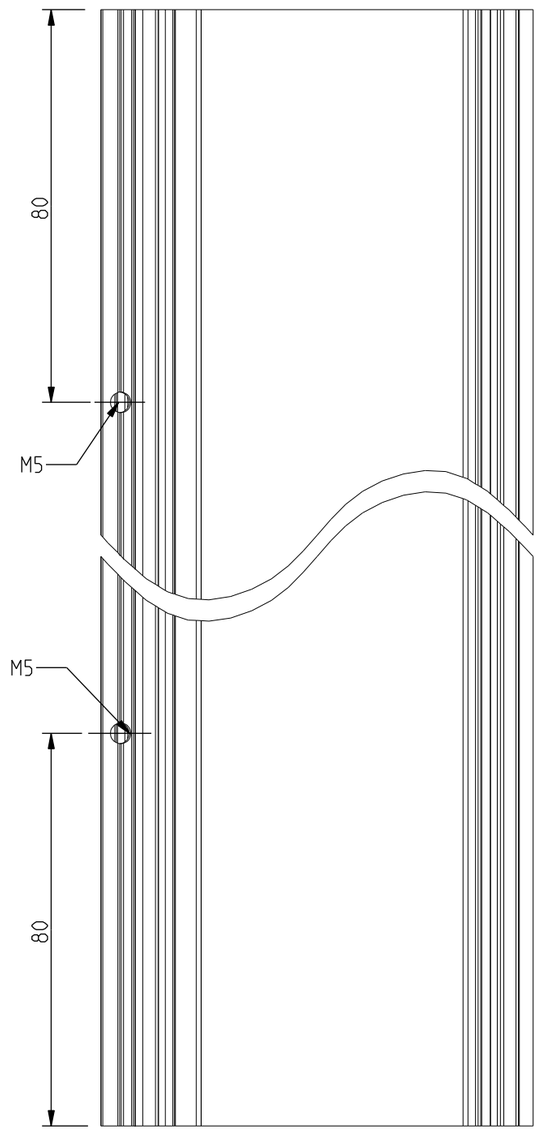

SCALE 4:5

SCALE:	4:5	DATE:	EUROP. PROJ.	HunterDouglas	ART. CODE NO.:
DRAWN BY:	T. Garmyn	16-05-13			-
MASS (GRAMS) :	279,388	-		ALL RIGHTS RESERVED. THIS DRAWING IS THE PROPERTY OF H.D. AND MAY NOT BE COPIED OR MULTIPLIED NEITHER WHOLLY OR PARTLY. IT MAY NOT BE SUBMITTED FOR PERUSAL TO THIRD PARTIES EITHER.	-
GROUP NAME: ProScreen				Release level: In Work	SIZE: A3
PART NAME: CASSETTE 85 CABLE GUIDING				MODEL NUMBER: 17-85-031	Rev. 01